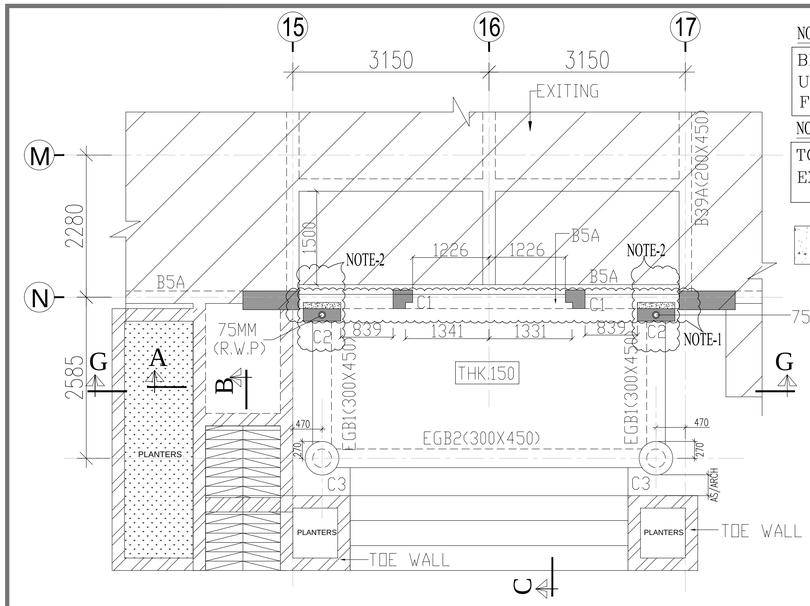


# PART PLAN AT ENTRANCE GATE

NOTE-1

BEAM B5A TOP NEED TO BE DISMANTLED UPTO SLAB THICKNESS AND TO BE FILLED WITH NEW CONCRETE.

NOTE-2

TOP BARS OF EGB1 BEAM TO BE TIED WITH EXISTING BEAM(B5A)

COLUMN UPTO PLINTH LEVEL.

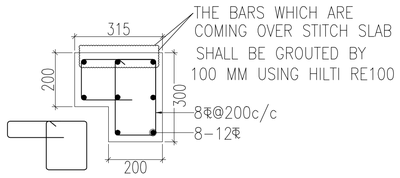


COLUMN DETAIL-C1
(BARS ERECTING FROM SLAB)

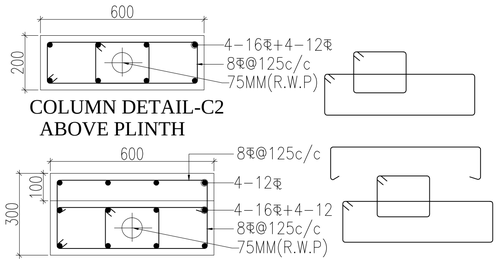


COLUMN DETAIL-C2
ABOVE PLINTH

COLUMN DETAIL-C2
UP TO PLINTH LVL.

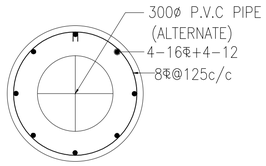


COLUMN BOTTOM LVL.PLAN
C3 (540Ø)

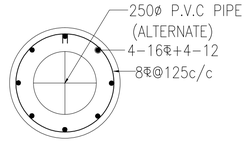


COLUMN TOP LVL.PLAN
C3 (440Ø)

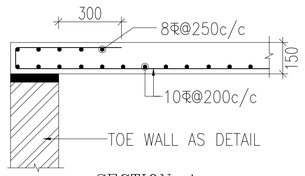


SECTION-A

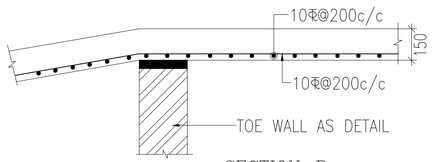


SECTION-B

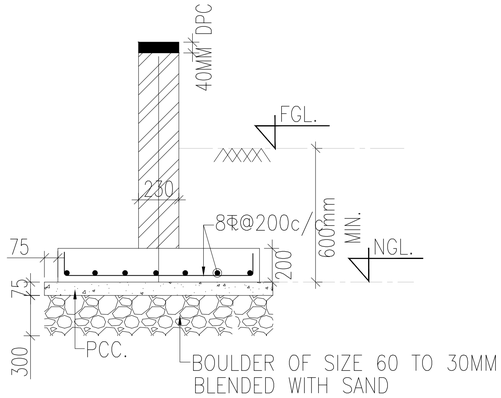


TYP.TOE WALL DETAIL

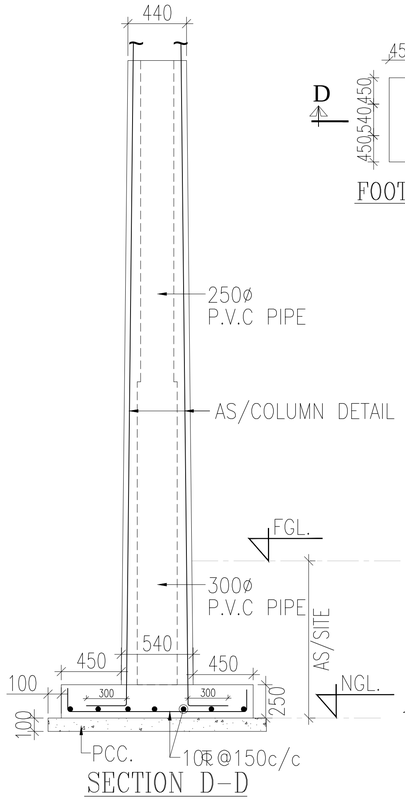


SECTION D-D

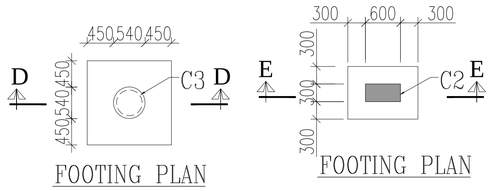


FOOTING PLAN

FOOTING PLAN

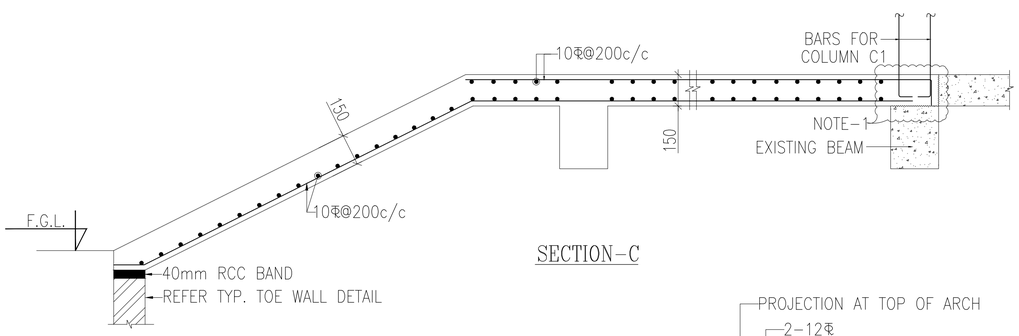


SECTION-C

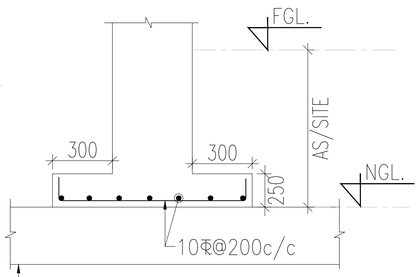


SECTION E-E

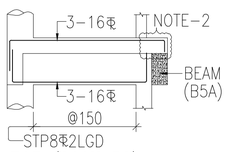


EGB1(300X450)

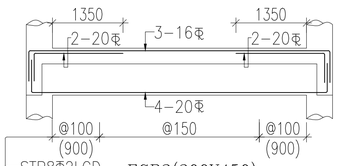


EGB2(300X450)

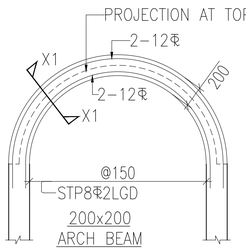


200x200
ARCH BEAM

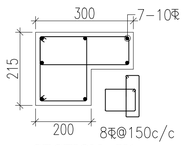


SECTION - X1

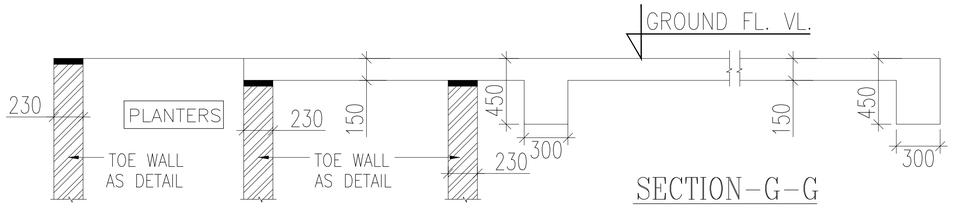


SECTION-G-G

GOOD FOR CONSTRUCTION
CHORDIA TECHNO CONSULTANTS
I-1738, CHITTRANJAN PARK,
LOWER GROUND FLOOR,
NEW DELHI-110019
TEL :-(011)41603915, 41644915/6

THIS DWG.IS THE PROPERTY OF M/S OMAXE LTD. IT IS NOT TO BE USED FOR ANY PURPOSE OTHER THAN FOR WHICH IT IS ISSUED FOR.

## General Notes

1. READ THIS DRAWING IN CONJUNCTION WITH RELEVANT ARCHITECTURAL DRAWINGS. ANY DISCREPANCY IF FOUND SHALL BE BROUGHT TO THE NOTICE OF CONSULTANT.
2. ALL DIMENSIONS & LEVELS ARE IN MILIMETERS.
3. DO NOT SCALE ANY DIMENSION.
4. CONFIRM LOCATION OF WALLS WITH RELEVANT ARCH. DRGS.
5. GRADE OF CONCRETE
   BEAMS : M-25 COLUMNS/RCC WALLS : AS/SCHDULE.
   SLABS : M-25 RAFT : M-25
6. HYSD REINFORCEMENT BARS CONFIRM TO IS:1786:1979 FE 500D.
7. THE CLEAR COVER TO THE REINFORCEMENT SHALL BE AS FOLLOWS:-
   (a) FOUNDATION : 75 MM
   (b) COLUMNS : 40 MM
   (c) BEAMS (top & bottom) 25 MM side cover 25mm
   (d) SLABS : 20 MM
   (e) CHAJJAS/CANOPY : 20 MM
   (f) R.C.C. WALL : 30 MM
   NOMINAL COVER IS THE DEPTH OF CONCRETE COVER TO ALL STEEL REINFORCEMENT INCLUDING LINKS/ TIES/ STIRRUPS.
8. NOT MORE THAN 50% OF THE BARS SHALL BE LAPPED AT ANY SECTION. LAPS CLOSE TO THE MID SPAN IN BOTTOM BARS & CLOSE TO SUPPORTS IN TOP BARS SHALL BE AVOIDED.
9. INDICATES BOTTOM BARS
   INDICATES TOP BARS
   OPENING IN STRUCTURAL ELEMENT
   P.C.C WORK
   BRICK WORK
10. ALL R.C.C. TO BE MACHINE MIXED, VIBRATED AND CURED THOROUGHLY AS PER I.S 456-LATEST.
11. REINFORCEMENT SHALL BE PROVIDED IN TWO LAYERS WHEREVER FOUND NECESSARY WITH SPACER BAR TO BE PROVIDED BETWEEN TWO LAYERS OF REINFORCEMENTS AS PER IS:456. SPACER BARS Φ
12. ALL DIMENSIONS MUST BE CHECKED WITH ARCHITECT'S DRGS.& IN CASE OF ANY DISCRIPANCY ARCHITECTS DRGS. SHALL PREVAIL.
13. ALL CONSTRUCTION JOINTS SHALL BE APROVED BY CONSULTANT ON THE BASIS OF SCHEME PREPARED BY CONTRACTOR.
14. TOP AND BOTTON EXTRA BARS IN BEAMS TO EXTEND BEYOND THE FACE OF SUPPORT AS SHOWN IN DRG UNLESS OTHERWISE SHOWN.
15. THE FIRST STIRRUPS IN BEAMS SHALL BE AT A DISTANCE OF 50MM FROM THE JOINT FACE THE SPECIAL CONFINING REINFORCEMENT SHALL BE PROVIDED THROUGH THE JOINT AT THE GIVEN SPACING IN COLUMNS.
16. All ANGLES ARE RIGHT ANGLES UNLESS OTHERWISE SPECIFIED.
17. PROVIDE DIST STEEL OVER EXTRA TOP BARS IS: 8Φ@250 c/c (10")
    8Φ@250 c/c (10")

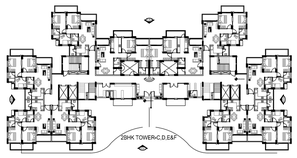


| | | |
|---|---|---|
| R1 | 23.09.2019 | THERE IS NO REVISION IN THIS SHEET |
| R0 | 21.09.2019 | GOOD FOR CONSTRUCTION |

REVISION

STR.CONSULTANT :
CHORDIA TECHNO CONSULTANTS
I-1738, LOWER GROUND FLOOR,
CHITTRANJAN PARK,
NEW DELHI-110019.
PH : (011)-41644915,41644916 FAX :(011)41603915

**APPROVED BY**

| DEPARTMENT | SEAL |
|---|---|
| ARCHITECTURE | |
| ARCHITECTURE | |
| STRUCTURE | S.JAIN |
| STRUCTURE | |
| ELECTRICAL | |
| ELECTRICAL | |
| SERVICES | |
| LANDSCAPE | |

OMAXE

PROJECT TITLE:
OMAXE ANANDA
PLOT NO: GH-11, PART-I, SECTOR-7
HITECH CITY, ALLAHABAD

DRAWING TITLE
ENTRANCE DETAIL FOR
(2BHK) (TOWER-A&B)

SCALE: N.T.S

DRAWING NO:- OMAXE-AND-3BHK-A&B-ST-099